Robust Coordinated Design of UPFC Damping Controller and PSS Using Chaotic Optimization Algorithm

A. Safari[1] H. Shayeghi[2] S. Jalilzadeh[3]

[1] Assistant Professor, Department of Electrical Engineering, Azarbaijan Shahid Madani University, Tabriz, Iran
safari@azaruniv.edu

[2] Professor, Department of Electrical Engineering, University of Mohaghegh Ardabili, Ardabil, Iran
hshayeghi@gmail.com

[3] Associate Professor, Department of Electrical Engineering, University of Zanjan, Zanjan, Iran
jalilzadeh@znu.ac.ir

Abstract :

A Chaotic Optimization Algorithm (COA) based approach for the robust coordinated design of the UPFC power oscillation damping controller and the conventional power system stabilizer has been investigated in this paper. Chaotic Optimization Algorithms, which have the features of easy implementation, short execution time and robust mechanisms of escaping from local optimum, is a promising tool for engineering applications. The coordinated design problem of PSS and UPFC damping controllers over a wide range of loading conditions and system configurations is formulated as an optimization problem with the time domain -based objective function which is solved by a COA based on Lozi map. Since chaotic mapping enjoys certainty, ergodicity and the stochastic property, the proposed chaotic optimization introduces chaos mapping using Lozi map chaotic sequences which increases its convergence rate and resulting precision. To ensure the robustness of the proposed coordinated controllers tuning, the design process takes into account a wide range of operating conditions and system configurations. The effectiveness of the proposed method is demonstrated through nonlinear time-domain simulation and some performance indices studies under over a wide range of loading conditions. The results of these studies show that the COA based coordinated controller has an excellent capability in damping power system oscillations and enhance greatly the dynamic stability of the power system.

Keywords: UPFC, Chaotic Optimization algorithm, Coordinated Designing, Dynamic Stability, Power Oscillation Damping.

Submission date: 3, April, 2009
Conditionally Acceptance date: 10, July, 2011
Acceptance date: 28, Jan, 2015
Corresponding author: A. Safari

Corresponding author's address: Department of Electrical Engineering, Azarbaijan Shahid Madani University, Tabriz, Iran.

1. Introduction

In recent years, the fast progress in the field of power electronics had opened new opportunities for the application of the FACTS devices as one of the most effective ways to improve power system operation controllability and power transfer limits [1]. Through the modulation of bus voltage, phase shift between buses, and transmission line reactance, FACTS devices can cause a substantial increase in power transfer limits during steady-state. Because of the extremely fast control action associated with FACTS-device operations, they have been very promising candidates for utilization in power system damping enhancement. The Unified Power Flow Controller (UPFC) is regarded as one of the most versatile devices in the FACTS device family [2-4] which has the ability to control of the power flow in the transmission line, improve the transient stability, mitigate system oscillation and provide voltage support. It performs this through the control of the in-phase voltage, quadrate voltage and shunts compensation due to its mains control strategy. The application of the UPFC to the modern power system can therefore lead to the more flexible, secure and economic operation [1]. An industrial process, such as a power system, contains different kinds of uncertainties due to continuous load changes or parameters drift due to power systems highly nonlinear and stochastic operating nature. Consequently, a fixed parameter controller based on the classical control theory is not certainly suitable for the UPFC damping control design. Thus, it is required that a flexible controller be developed. Some authors suggested neural networks method [5] and robust control methodologies [6] to cope with system uncertainties to enhance the system damping performance using the UPFC. However, the parameters adjustments of these controllers need some trial and error. Also, although using the robust control methods, the uncertainties are directly introduced to the synthesis, but due to the large model order of power systems the order resulting controller will be very large in general, which is not feasible because of the computational economical difficulties in implementing. Some authors used fuzzy logic based damping control strategy for TCSC, UPFC and SVC in a multi-machine power system [7]. The damping control strategy employs non-optimal fuzzy logic controllers that are why the system's response settling time is unbearable. Moreover, the initial parameters adjustment of this type of controller needs some trial and error. However, uncoordinated control of FACTS devices and PSS may cause destabilizing interactions. To improve overall system performance, many researches were made on the coordination between PSSs and FACTS damping controllers [10-13]. Some of these methods are based on the complex nonlinear simulation, while the others are based on the linearized power system model. In this paper, an optimization-based tuning algorithm is proposed to coordinate among PSS and UPFC power oscillation damping (POD) controllers simultaneously. This algorithm optimizes the total system performance by means of COA method. Chaos is a kind of characteristic of non-linear systems which is a bounded unstable dynamic behavior, which exhibits sensitive dependence on initial conditions and include infinite unstable periodic motions. The COA is based on ergodicity, stochastic properties and 'regularity' of chaos. It is not like some stochastic optimization algorithms that escape from local minima by accepting some bad solutions according to a certain probability but COA searches on the regularity of chaotic motion to escape from local minima [14-18].

A new approach for the problem of coordinated designing of the UPFC POD controller and the conventional power system stabilizer is formulated as an optimization problem. By minimizing the objective function in which the influences of both PSSs and UPFC POD controllers are considered, interactions among these controllers are improved. Thus, the overall system performance is optimized. The effectiveness of the proposed controller is demonstrated through nonlinear time simulation studies and some performance indices to damp low frequency oscillations under different operating conditions. Results evaluation show that the proposed coordinated designing achieves good robust performance for a wide range of operating conditions and is superior to uncoordinated design..

2. Chaotic optimization algorithm

Chaos often exists in nonlinear systems. It is a kind of highly unstable motion of deterministic systems in finite phase space. An essential feature of chaotic systems is that small changes in the parameters or the starting values for the data lead to vastly different future behaviors, such as stable fixed points, periodic oscillations, bifurcations, and ergodicity. This sensitive dependence on initial conditions is generally exhibited by systems containing multiple elements with nonlinear interactions, particularly when the system is forced and dissipative. Sensitive dependence on initial conditions is not only observed in complex systems, but even in the simplest logistic equation [14, 15]. The application of chaotic sequences can be an interesting alternative to provide the search diversity in an optimization procedure. Due to the non-repetition of chaos, it can carry out overall searches at higher speeds than stochastic ergodic searches that depend on probabilities.

The design of approaches to improve the convergence of chaotic optimization is a challenging issue. A novel chaotic approach is proposed here based on Lozi map. The simple philosophy of the COA includes two main steps: firstly mapping from the chaotic space to the solution space, and then searching optimal regions using chaotic dynamics instead of random search [16].

The Lozi's piecewise liner model is a simplification of the He´non map and it admits strange attractors. This chaotic map involves also non-differentiable functions which difficult the modeling of the associate time series. The Lozi map is given by:

$$y_1(k) = 1 - a \times |y_1(k-1)| + y(k-1) \quad (1)$$

$$y(k) = b \times y_1(k-1) \quad (2)$$

$$z(k) = \frac{y(k) - \alpha}{\beta - \alpha} \quad (3)$$

Where, k is the iteration number. In this work, the values of y are normalized in the range [0,1] to each decision variable in n-dimensional space of optimization problem. Therefore, y ε [-0.6418, 0.6716] and [a,b] = (-0.6418, 0.6716). The parameters used in this work are a = 1.7 and b = 0.5, these values suggested by [18]. The chaotic search procedure based on Lozi map can be illustrated as follows [14]:

Step 1: Initialization of variables and initial conditions: Set k = 1, $y_1(0)$, y(0), a = 1.7 and b = 0.5 of Lozi map. Set the initial best objective function $\bar{f}$.

Step 2: Algorithm of chaotic global search:

Begin

While $k \le M_g$ *do*

$x_i(k) = L_i + z_i(k) \times (U_i - L_i)$

if $f(X(k)) < \bar{f}$ *then*

$\bar{X} = X(k)$

$\bar{f} = f(X(k))$

End if

$k = k + 1;$

End while

End

Step 3: Algorithm of chaotic local search:

Begin

While $k \le (M_g + M_L)$ *do*

for $i = 1 to n$

if $r < 0.5$ *then*

$x_i(k) = \bar{x}_i + \lambda \times z_i(k) \times |U_i - \bar{X}_i|$

elseif

$x_i(k) = \bar{x}_i - \lambda \times z_i(k) \times |\bar{X}_i - L_i|$

End if

End for

if $f(X(k)) < \bar{f}$ *then*

$\bar{X} = X(k)$

$\bar{f} = f(X(k))$

End if

$k = k + 1;$

End while

End

Where f is the objective function, and X is the decision solution vector consisting of n variables, x_i, bounded by lower (L_i) and upper limits (U_i). M_g and M_L are maximum number of iterations of chaotic Global search and maximum number of iterations of chaotic Local search, respectively. In this paper λ is step size in chaotic local search and linearly decreases from 0.1 to 0.01. Also, $\bar{f}$ and $\bar{X}$ are best objective function and best solution from current run of chaotic search, respectively.

3. Description of case study system

Figure 1 shows a SMIB power system equipped with a UPFC. The synchronous generator is equipped with a PSS and it is delivering power to the infinite-bus through a double circuit transmission line and a UPFC. The UPFC consists of an excitation transformer (ET), a boosting transformer (BT), two three-phase GTO based voltage source converters (VSCs), and a DC link capacitors. The four input control signals to the UPFC are m_E, m_B, δ_E, and δ_B, where, m_E is the excitation amplitude modulation ratio, m_B is the boosting amplitude modulation ratio, δ_E is the excitation phase angle and δ_B is the boosting phase angle [4].

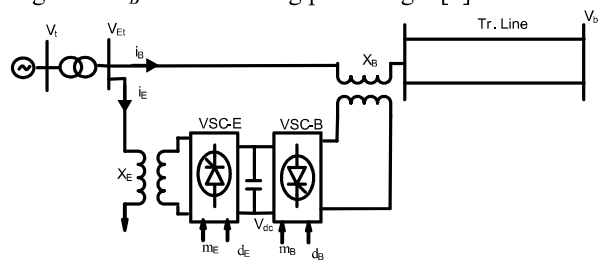

Fig. 1. SMIB power system equipped with UPFC

3.1. Power system nonlinear model with UPFC

The dynamic model of the UPFC is required in order to study the effect of the UPFC for enhancing the small signal stability of the power system. The system data is given in the Appendix. By applying Park's transformation and neglecting the resistance and transients of the ET and BT transformers, the UPFC can be modeled as [9]:

$$\begin{bmatrix} v_{Etd} \\ v_{Etq} \end{bmatrix} = \begin{bmatrix} 0 & -x_E \\ x_E & 0 \end{bmatrix} \begin{bmatrix} i_{Ed} \\ i_{Eq} \end{bmatrix} + \begin{bmatrix} \frac{m_E \cos\delta_E v_{dc}}{2} \\ \frac{m_E \sin\delta_E v_{dc}}{2} \end{bmatrix} \quad (4)$$

$$\begin{bmatrix} v_{Btd} \\ v_{Btq} \end{bmatrix} = \begin{bmatrix} 0 & -x_B \\ x_B & 0 \end{bmatrix} \begin{bmatrix} i_{Bd} \\ i_{Bq} \end{bmatrix} + \begin{bmatrix} \frac{m_B \cos\delta_B v_{dc}}{2} \\ \frac{m_B \sin\delta_B v_{dc}}{2} \end{bmatrix} \quad (5)$$

$$\dot{v}_{dc} = \frac{3m_E}{4C_{dc}} [\cos\delta_E \quad \sin\delta_E] \begin{bmatrix} i_{Ed} \\ i_{Eq} \end{bmatrix} + \frac{3m_B}{4C_{dc}} [\cos\delta_B \quad \sin\delta_B] \begin{bmatrix} i_{Bd} \\ i_{Bq} \end{bmatrix} \quad (6)$$

Where, v_{Et}, i_E, v_{Bt}, and i_B are the excitation voltage, excitation current, boosting voltage, and boosting current, respectively; C_{dc} and v_{dc} are the DC link capacitance and voltage. The nonlinear model of the SMIB system as shown in Fig. 2 is described by [4]:

$$\dot{\delta} = \omega_0 (\omega - 1) \quad (7)$$

$$\dot{\omega} = (P_m - P_e - D\Delta\omega)/M \quad (8)$$

$$\dot{E}'_q = (-E_q + E_{fd})/T'_{do} \quad (9)$$

$$\dot{E}_{fd} = (-E_{fd} + K_a(V_{ref} - V_t))/T_a \quad (10)$$

Where,

$$P_e = V_{td}I_{td} + V_{tq}I_{tq}; E_q = E'_{qe} + \left(X_d - X'_d\right)I_{td}$$
$$V_t = V_{td} + jV_{tq}; V_{td} = X_q I_{tq}; V_{tq} = E'_q - X'_d I_{td}$$
$$I_{td} = I_{tld} + I_{Ed} + I_{Bd}; I_{tq} = I_{tlq} + I_{Eq} + I_{Bq}$$

From Fig. 1. we can have:

$$\bar{v}_t = jx_{tE}(\bar{i}_B + \bar{i}_E) + \bar{v}_{Et} \tag{11}$$

$$\bar{v}_{Et} = \bar{v}_{Bt} + jx_{BV}\bar{i}_B + \bar{v}_b \tag{12}$$

$$\begin{aligned} v_{td} + jv_{tq} &= x_q(i_{Eq} + i_{Bq}) + j(E'_q - x'_d(i_{Ed} + i_{Bd})) \\ &= jx_{tE}(i_{Ed} + i_{Bd} + j(i_{Eq} + i_{Bq})) + v_{Etd} + jv_{Etq} \end{aligned} \tag{13}$$

Where, i_t and v_b, are the armature current and infinite bus voltage, respectively.

3.2 Power system linearized model

A linear dynamic model is obtained by linearizing the nonlinear model round an operating condition. The linearized model of power system as shown in Fig. 1. is given as follows:

$$\Delta\dot{\delta} = \omega_0\Delta\omega \tag{14}$$

$$\Delta\dot{\omega} = (-\Delta P_e - D\Delta\omega)/M \tag{15}$$

$$\Delta\dot{E}'_q = (-\Delta E_q + \Delta E_{fd})/T'_{do} \tag{16}$$

$$\Delta\dot{E}_{fd} = (K_A(\Delta v_{ref} - \Delta v) - \Delta E_{fd})/T_A \tag{17}$$

$$\begin{aligned} \Delta\dot{v}_{dc} &= K_7\Delta\delta + K_8\Delta E'_q - K_9\Delta v_{dc} + K_{ce}\Delta m_E \\ &+ K_{c\delta e}\Delta\delta_E + K_{cb}\Delta m_B + K_{c\delta b}\Delta\delta_B \end{aligned} \tag{18}$$

$$\begin{aligned} \Delta P_e &= K_1\Delta\delta + K_2\Delta E'_q + K_{pd}\Delta v_{dc} \\ &+ K_{pe}\Delta m_E + K_{p\delta e}\Delta\delta_E + K_{pb}\Delta m_B + K_{p\delta b}\Delta\delta_B \end{aligned} \tag{19}$$

$$\begin{aligned} \Delta E'_q &= K_4\Delta\delta + K_3\Delta E'_q + K_{qd}\Delta v_{dc} + K_{qe}\Delta m_E + K_{q\delta e}\Delta\delta_E \\ &+ K_{qb}\Delta m_B + K_{q\delta b}\Delta\delta_B \end{aligned} \tag{20}$$

$$\begin{aligned} \Delta V_t &= K_5\Delta\delta + K_6\Delta E'_q + K_{vd}\Delta v_{dc} + K_{ve}\Delta m_E + K_{v\delta e}\Delta\delta_E \\ &+ K_{vb}\Delta m_B + K_{v\delta b}\Delta\delta_B \end{aligned} \tag{21}$$

K_1, $K_2 \ldots K_9$, K_{pu} ,K_{qu} and K_{vu} are linearization constants. The block diagram of the linearized dynamic model of the SMIB power system with UPFC is shown in Fig. 2.

4. PSS and UPFC damping controllers

4.1. PSS Structure

The operating function of a PSS is to produce a proper torque on the rotor of the machine involved in such a way that the phase lag between the exciter input and the machine electrical torque is compensated. The supplementary stabilizing signal considered is one proportional to speed. A widely speed based used conventional PSS is considered throughout the study. The transfer function of the PSS is [8,12]:

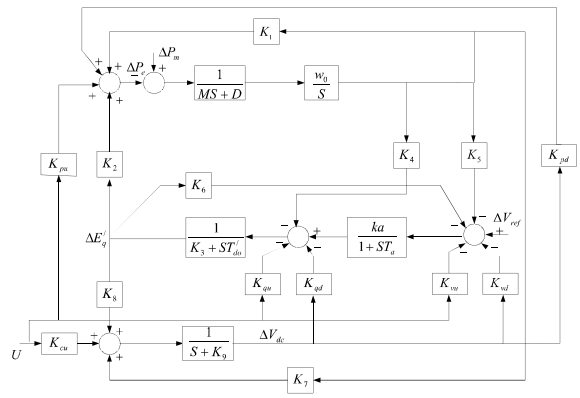

Fig. 2. Modified Heffron–Phillips model of SMIB system with UPFC.

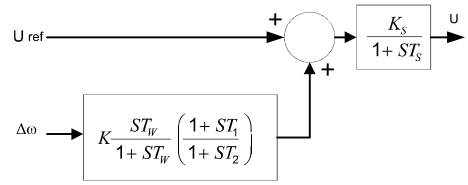

Fig. 3. UPFC with lead-lag controller

$$U_{pss} = K\frac{sT_W}{1+sT_W}\left[\frac{(1+sT_1)}{(1+sT_2)}\right]\Delta\omega(s) \tag{22}$$

Where, Δω is the deviation in speed from the synchronous speed. This type of stabilizer consists of a washout filter, a dynamic compensator. The output signal is fed as a supplementary input signal, U_{pss}, to the regulator of the excitation system. The washout filter, which essentially is a high pass filter, is used to reset the steady-state offset in the output of the PSS. The value of the time constant T_w is usually not critical and it can range from 0.5 to 20 s. In this study, it is fixed to 10 s. The dynamic compensator is made up to a lead-lag stage and an additional gain. The adjustable PSS parameters are the gain of the PSS, K, and the time constants, T_1, T_2. The lead-lag block present in the system provides phase lead compensation for the phase lag that is introduced in the circuit between the exciter input and the electrical torque.

4.2. UPFC damping controller

The damping controller is designed to produce an electrical torque in phase with the speed deviation according to phase compensation method. The four control parameters of the UPFC (m_B, m_E, δ_B and δ_E) can be modulated in order to produce the damping torque. In this paper δ_E is modulated in order to coordinated design. The speed deviation $\Delta\omega$ is considered as the input to the damping controllers. The structure of UPFC based damping controller, as shown in Fig. 3, is similar to the PSS controllers. The

parameters of the damping controllers for the purpose of simultaneous coordinated design are obtained using COA.

4.3. Robust coordinated design using COA

To acquire an optimal combination, this paper employs COA [14] to improve optimization synthesis and find the global optimum value of fitness function. A performance index based on the system dynamics after an impulse disturbance alternately occurs in the system is organized and used to form the objective function of the design problem. In this study, an Integral of Time multiplied Absolute value of the Error (ITAE) is taken as the objective function. Since the operating conditions in power systems are often varied, a performance index for a wide range of operating points is defined as follows:

$$J = \sum_{i=1}^{Np} \int_{0}^{tsim} t\left|\Delta\omega_i\right| dt \tag{23}$$

Where, t_{sim} is the time range of simulation and N_P is the total number of operating points for which the optimization is carried out. For objective function calculation, the time-domain simulation of the power system model is carried out for the simulation period. It is aimed to minimize this objective function in order to improve the system response in terms of the settling time and overshoots. The design problem can be formulated as the following constrained optimization problem, where the constraints are the controller parameters bounds [12]:

Minimize J subject to:

$$\begin{aligned} K^{\min} &\le K \le K^{\max} \\ T_1^{\min} &\le T_1 \le T_1^{\max} \\ T_2^{\min} &\le T_2 \le T_2^{\max} \end{aligned} \tag{24}$$

Typical ranges of the optimized parameters are [0.01-100] for K and [0.01-1] for T_1 and T_2 [17]. The proposed approach employs COA to solve this optimization problem and search for an optimal set of coordinated controller parameters. The optimization of PSS and UPFC controller parameters is carried out by evaluating the cost function as given in Eq. (23), which considers a multiple of operating conditions. The operating conditions considered are:

- Base case: P = 0.80pu, Q = 0.114 pu and X_L=0.3 pu. (Nominal loading)
- Case 1: P = 0.2 pu, Q = 0.01 and X_L=0.3 pu. (Light loading)
- Case 2: P = 1.20 pu, Q = 0.4 and X_L=0.3 pu. (Heavy loading)
- Case 3: The 30% increase of line reactance X_L at nominal loading condition.
- Case 4: The 30% increase of line reactance X_L at heavy loading condition.

In our implementation, to acquire better performance, maximum number of iterations of chaotic Global search and maximum number of iterations of chaotic Local search are chosen as 1000 and 400, respectively. Also, λ is step size in chaotic local search and linearly decreases from 0.1 to 0.01. It should be noted that COA is run several times and then optimal set of coordinated controller parameters is selected. The final values of the optimized parameters with objective function, *J*, are given in Table 1.

Table. 1.The optimal parameter settings of the proposed controllers

Controller parameters	Uncoordinated design		Coordinated design	
	PSS	δ_E	PSS	δ_E
K	77.55	69.21	27.62	54.77
T_1	0.5409	0.4211	0.3588	0.5177
T_2	0.2822	0.3285	0.2811	0.4206

5. Nonlinear time-domain simulation

In order to show the effectiveness of the proposed model of power system with PSS and UPFC damping controller and coordinated tuning the controller parameters in the way presented in this paper, the performance of the proposed controller under transient conditions is verified by applying a 6-cycle three-phase fault at t = 1 sec, at the middle of the one transmission line. The fault is cleared by permanent tripping of the faulted line. To evaluate the performance of the proposed simultaneous design approach the response with the proposed controllers are compared with the response of the PSS and UPFC damping controller individual design. The speed deviation of generator at nominal, light and heavy loading conditions with coordinated and uncoordinated design of the controllers is shown in Fig. 4. It is clear from this Fig. that, the simultaneous design of PSS and UPFC damping controller by the proposed approach significantly improves the stability performance of the example power system and low frequency oscillations are well damped out.

Also, Fig. 5 shows the electrical power deviation (ΔP_e) and internal voltage variations ($\Delta E'_q$) with coordinated and uncoordinated controllers, respectively. It can be seen that the COA based coordinated controllers achieves good robust performance, provides superior damping in comparison with the individual design and enhance greatly the dynamic stability of power systems.

From the above conducted tests, it can be concluded that the coordinated controllers are superior to the uncoordinated controllers. To demonstrate performance robustness of the proposed method, two performance indices: the Integral of the Time multiplied Absolute

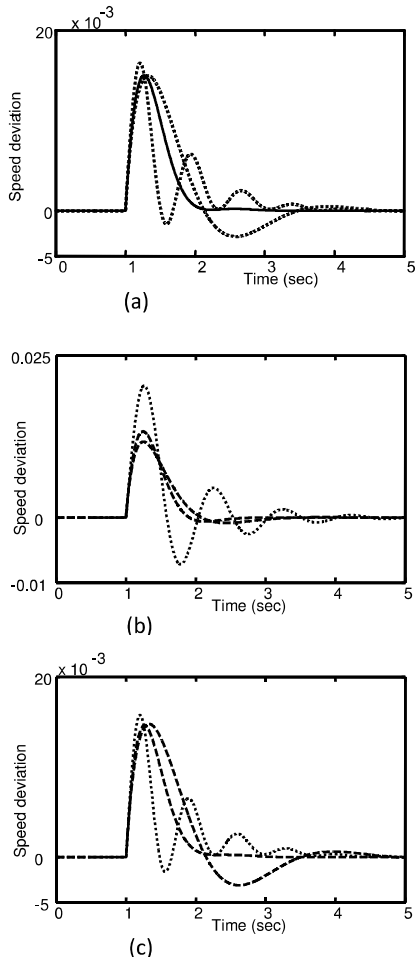

Fig. 4. Dynamic responses for Δω at (a) nominal (b) light (c) heavy loading conditions; Solid (UPFC & PSS), Dashed (UPFC) and Dotted (PSS)

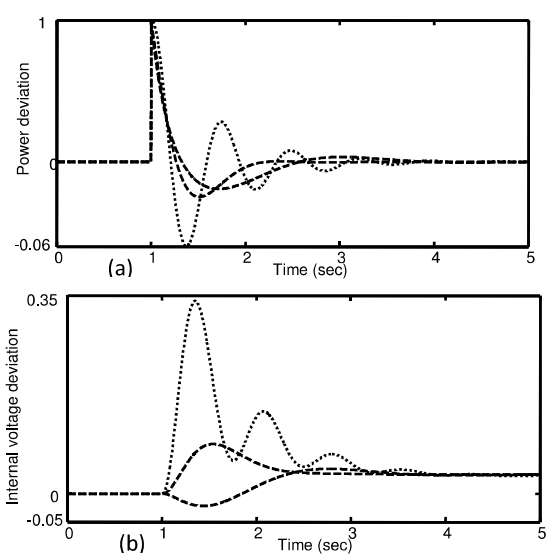

Fig. 5. Dynamic responses at nominal loading (a) ΔP_e and (b) $\Delta E'_q$; Solid (UPFC & PSS), Dashed (UPFC) and Dotted (PSS)

value of the Error (ITAE) and Figure of Demerit (FD) based on the system performance characteristics are defined as:

$$ITAE = \int_0^{tsim} t|\Delta\omega|dt$$

$$FD = (100 \times OS)^2 + (500 \times US)^2 + TS^2 \qquad (24)$$

Where, speed deviation (Δω), Overshoot (OS), Undershoot (US) and settling time of speed deviation of the machine is considered for evaluation of the ITAE and FD indices. It is worth mentioning that the lower the value of these indices is, the better the system response in terms of time-domain characteristics. Numerical results of performance robustness for all system loading cases are listed in Table 2. It is also clear from the Table 2 that, application both PSS and UPFC damping controller where the controllers are tuned by the proposed simultaneous design approach gives the best response in terms of overshoot, undershoot and settling time.

Table. 2.Values of Performance Indices ITAE and FD

Controller	Base Case		Case 1		Case 2		Case 3		Case 4	
	ITAE	FD	ITAE	FD	ITAE	FD	ITAE	FD	ITAE	FD
PSS	0.0162	26.95	0.0372	64.23	0.0155	25.30	0.0158	25.83	0.0227	24.10
δ_E	0.0220	25.45	0.0108	12.09	0.0235	26.76	0.0168	23.44	0.0261	25.57
PSS & δ_E	0.0114	11.01	0.0092	8.76	0.0113	10.78	0.0098	15.64	0.0214	18.29

6. Conclusion

In this paper, the simultaneous coordinated designing of the UPFC power oscillation damping controller and the conventional power system stabilizer in single-machine infinite-bus power system is investigated. For the design problem, a parameter-constrained, time domain objective function is developed to improve the performance of power system subjected to a disturbance. Then, COA is employed to coordinately tune the parameters of the PSS and UPFC damping controller. The effectiveness of the proposed control approach for improving transient stability performance of a power system are demonstrated by a weakly connected example power system subjected to different operating conditions. The non-linear time domain simulation results show the effectiveness of the proposed method and it ability to provide good damping of low frequency oscillations. The system performance characteristics in terms of 'ITAE' and 'FD' indices reveal that the simultaneous coordinated designing of the UPFC power oscillation damping controller and the PSS demonstrates its superiority than both the uncoordinated designed stabilizers of the PSS and UPFC damping controller at various loading conditions.

References

[1] A. J. F. Keri, X. Lombard, Edris A.A., "Unified power flow controller: modeling and analysis", IEEE Trans. Power Systems, Vol. 14, No. 2, pp. 648-654, 1999.

[2] R. Ghanizadeh, A. Jahandideh Shendi, M. Ebadian, M.A. Golkar, A. Ajami, A multiobjective HBMO based new FC-MCR compensator for damping of power system oscillations, Journal of Operation and Automation in Power Engineering, Vol. 1, No. 2, pp. 110-123, 2013.

[3] R. Hemmati, H.R. Kofighar, M. Ataei, Normalized and improved model reference adaptive system for unified power flow controller, Journal of Iranian Association of Electrical and Electronics Engineers, Vol. 12, No.1, pp. 139-153, Spring & Summer 2015 (in persian).

[4] E. Hojjati, S. M. Barakati, S. Tavakoli Afshar, Optimal determination of generation and FACTS devices location/size for congestion elimination, Journal of Iranian Association of Electrical and Electronics Engineers, Vol. 12, No.1, pp. 125-137, Spring & Summer 2015 (in persian).

[5] N. Bigdeli, E. Ghanbaryan, K. Afshar, Low frequency oscillations suppression via CPSO based damping controller, Journal of Operation and Automation in Power Engineering, Vol. 1, No. 1, pp. 22-23, 2013.

[6] S. A. Taher, R. Hemmati, A. Abdolalipour, Design of UPFC controllers for simultaneous tune of power and voltage using of genetic algorithm, Journal of Iranian Association of Electrical and Electronics Engineers, Vo1. 6, No.1, pp. 61-70, Spring & Summer 2009 (in Persian).

[7] K. Mazlumi, M. Darabian, M. Azari, Adaptive fuzzy synergetic PSS design to damp power system oscillations, Journal of Operation and Automation in Power Engineering, Vol. 1, No. 1, pp. 54-62, 2013.

[8] P. M. Anderson, A. A. Fouad, "Power System Control and Stability", Ames, IA: Iowa State University .Press, 1977.

[9] N. Tambey, M. L. Kothari, "Unified power flow controller based damping controllers for damping low frequency oscillations in a power system", IEE Proc. On Generation, Transmission and Distribution, Vol. 150, No. 2, pp. 129-140, 2003.

[10] P. Pourbeik, M. J. Gibbard, "Simultaneous coordination of power-system stabilizers and FACTS device stabilizers in a multimachine power system for enhancing dynamic performance", IEEE Trans. Power Systems, Vol. 13, No. 2, pp. 473-479, 1998.

[11] L. J. Cai, I. Erlich, "Simultaneous coordinated tuning of PSS and FACTS damping controllers in large power systems", IEEE Trans. Power Systems, Vol. 20, No. 1, pp. 294-300, 2005.

[12] Y. L. Abdel-Magid, M. A. Abido, "Robust coordinated design of excitation and TCSC-based stabilizers using genetic algorithms", Electric Power Systems Research, Vol. 69, pp. 129-141, 2004.

[13] X. lei, E. N. Lerch, D. Povh, "Optimization and coordination of damping controls for improving system dynamic performance", IEEE Trans. On Power Systems, Vol. 16, No. 3, pp. 473-480, 2001.

[14] L. D. S. Coelho, Tuning of PID controller for an automatic regulator voltage system using chaotic optimization approach, Chaos, Solitons and Fractals, Vol. 39, No. 4, pp. 1504-1514, 2009.

[15] D. Yang, G. Li, G. Cheng, on the efficiency of the chaos optimization algorithms for global optimization, Chaos, Solitons and Fractals. Vol. 34, pp. 1366-1375, 2007.

[16] X. F. Yan, D. Z. Chen, S. X. Hu, Chaos-genetic algorithms for optimizing the operating conditions based on RBF-PLS model, Computer and chemical engineering. Vol. 23; pp. 1393-1404, 2003.

[17] B. Liu, L. Wang, Y. H. Jin, F. Tang, D. X. Huang, Improved particle swarm optimization combined with chaos, Chaos, Solitons and Fractals. Vol. 25; pp. 1261-1271, 2005.

[18] R. Caponetto, L. Fortuna, S. Fazzino, M. G. Xibilia, Chaotic sequences to improve the performance of evolutionary algorithms, IEEE Trans Evolutionary Computation, Vol. 7, No. 3; pp. 289-304, 2003.

Appendix

The nominal parameters and operating condition of the system are listed in Table 3.

Table. 3. System Parameters [9]

Generator	$M = 8$ MJ/MVA	$T'_{do} = 5.044$ s	$X_d = 1$pu
	$X_q = 0.6$p.u	$X'_d = 0.3$pu	$D = 0$
Excitation system		$K_a = 10$	$T_a = 0.05$s
Transformers		$X_T = 0.1pu$	$X_E = 0.1pu$
		$X_B = 0.1pu$	
Transmission line		$X_L = 1$pu	
Operating condition		$P = 0.8pu$	$V_b = 1.0pu$
		$V_t = 1.0pu$	
DC link parameter		$V_{DC} = 2pu$	$C_{DC} = 1pu$
UPFC parameter		$m_B = 0.08$	$\delta_B = -78.21^\circ$
		$\delta_E = -85.35^\circ$	$m_E = 0.4$
		$K_s = 1$	$T_s = 0.05$